Piccolo, Sofia & Madrid Inbuilt Gasfire - NG to LP Gas Conversion.

This conversion must be carried out by a qualified Technician. If in doubt do not attempt this conversion.

These units are initially supplied for Natural Gas Installations and must be converted for use with LPG.

NOTE: Gas “Manifold Pressure” will need changing.

1. Turn the unit off.
2. Unplug or disconnect the power source to the fire.
3. Remove the glass front as per the owner’s manual.

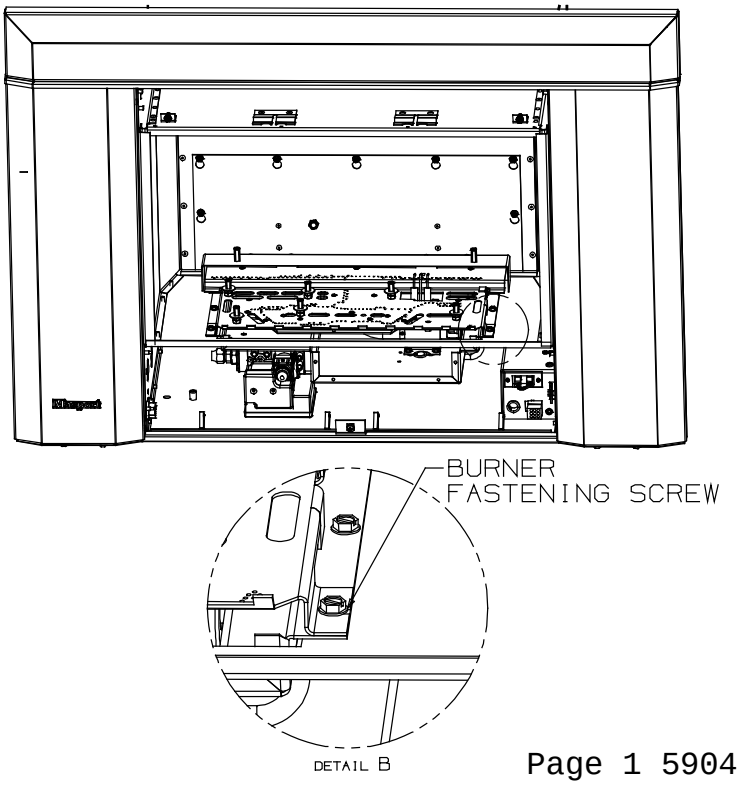

4. Remove the logs as per the owner’s manual.
5. Release the bottom grill retaining screw one quarter turn anticlockwise and remove the bottom grille by lifting it upwards and outwards to clear the retaining pins.
6. Remove the 2 screws holding the burner assembly to the burner tray as below. Push the burner to the left and lift out.
7. Access is now available to the brass main injector. A 13mm spanner will be required to remove the injector, the elbow behind the injector will also need to be held to avoid twisting the pipe work. Remove the main injector and discard.
8. Install the new LP injector marked “1.7” (for NG=>LPG conversion) and tighten. Again avoid twisting the pipe work.
9. For Piccolo models only, the pilot jet also needs replacing. Disconnect the pilot tube from the pilot manifold to enable free movement of

the pilot assembly. Unscrew the pilot jet securing screw as per figure over page.
Unscrew the pilot assembly, to enable access to the pilot jet.

10. Screw in the new pilot jet, ensuring it is screwed home. Replace the pilot jet securing screw.

11. Re-fasten the pilot assembly to the burner tray and connect the pilot tube to the pilot manifold.

12. For all models. Reinstall the burner.

13. Reverse steps 6), 5), 4), 3) and 2).

14. Check for gas leaks.

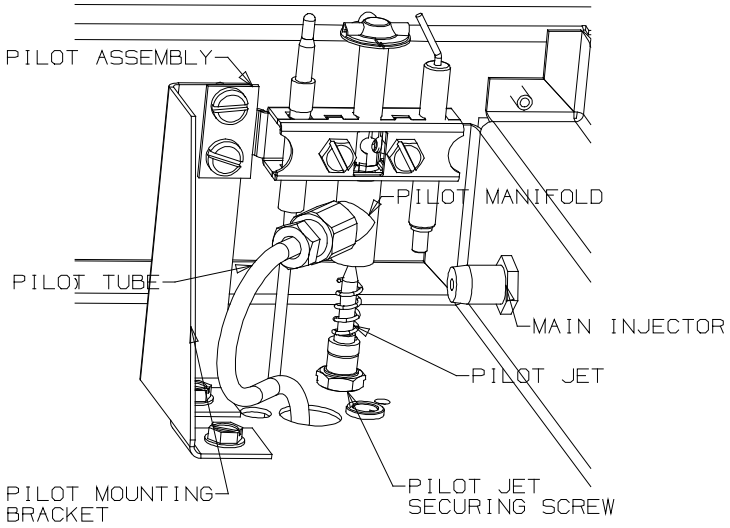

GAS PRESSURE TEST

15. With the fire burning at maximum rate, check the Test point pressure against the specified value on the compliance plate or as below. Refer to the owners' manual for the correct procedure.

The unit is preset to give the correct gas input at the specified injector pressures shown on the label. The maximum injector pressure is:

Gas Type	Piccolo		EIS	
	Low	High	Low	High
Natural Gas	0.30kPa	0.75kPa	0.35kPa	0.82kPa
Propane	0.90kPa	2.10kPa	1.00kPa	2.30kPa

The injector pressure is controlled by a regulator built into the gas valve on EIS models (Sofia and Madrid) and by a separate pressure regulator on the Piccolo and it should be checked at the outlet pressure test point. The pressure check should be carried out with the unit burning and the setting should be as per the table above.

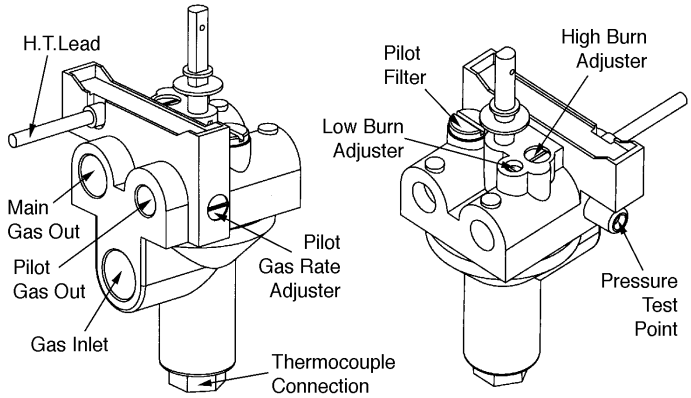

Piccolo

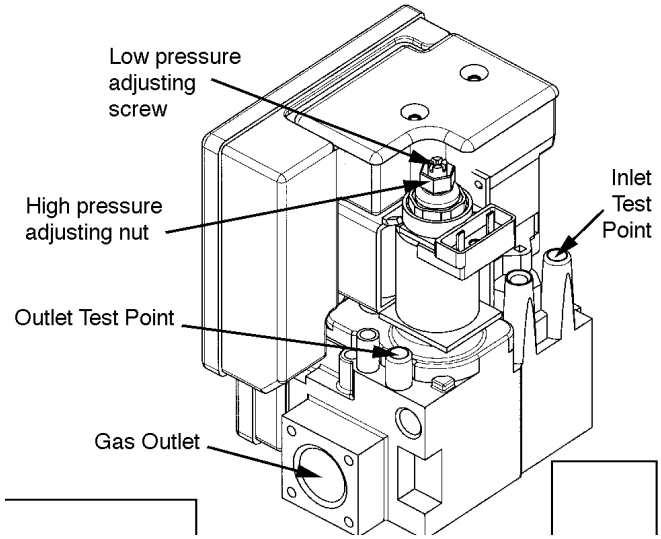

EIS Models